Chicago Pneumatic

CP35 Series
Model **C**
5” (125 mm) PALM SANDERS

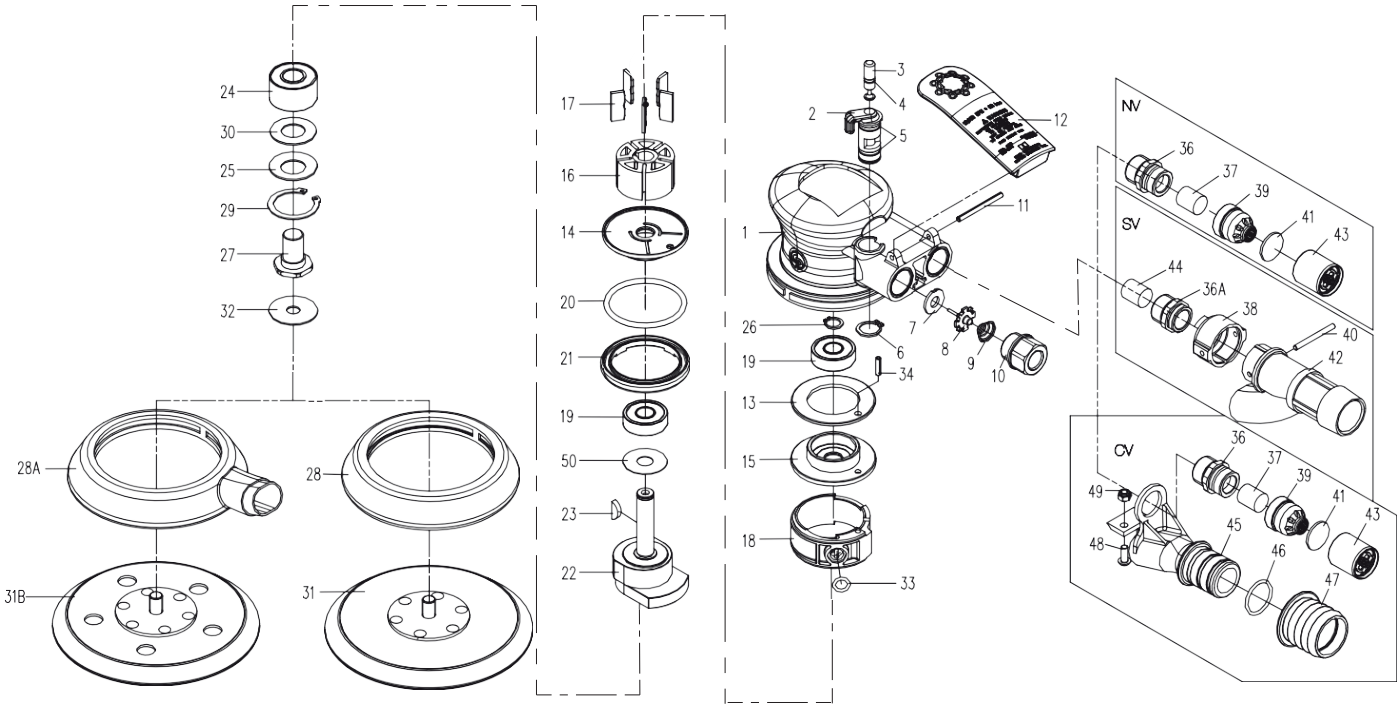

SV : Self Vacuum,CP3512 & CP3513

NV : Non Vacuum, CP3510 & CP3511
CV : Central Vacuum, CP3514 & CP3515

Item	Part No.	Description	Qty.
A	**8940168367**	**THROTTLE KIT**	
2		Regulator	1
3		Valve Stem	1
4		O-Ring	1
5		O-Ring	2
6		Retaining ring	1
B	**8940168368**	**VALVE SEAT KIT**	
7		Valve seat	1
8		Tip Valve	1
9		Conical Spring	1
C	**8940168369**	**EXHAUST KIT (FOR CP3510, CP3511, CP3514, CP3515)**	
36		Muffler Screw	1
37		Muffler	1
39		Nozzle	1
41		Muffler	1
43		Muffler Cap	1
D	**8940168372**	**ECO CHANGE MOTOR KIT**	
13		Front Ring	1
14	8940163414	Rear End Plate	1
15	8940163415	Front End Plate	1
16	8940163416	Rotor	1
17	8940163417	Blades set (5 pcs.)	1
18	8940163418	Cylinder	1
19		Bearing (6000ZZ)	2
20	8940163420	O-Ring	1
21	8940163421	Lock ring	1
22	8940163423	Motor Shaft Balancer 3/16" (5mm) orbital	1
23		Rotor Key	1
24		Bearing (500 IRS)	1
25		Bearing Shield	1
26		Snap Ring	1
27	8940163429	Balancer Shaft	1
29		Snap Ring	1
30		Bearing Seal	1
33	8940163435	O-Ring	1
34		Pin	1
50		Anti-dust washer	1

Item	Part No.	Description	Qty.
1	8940163399	Housing Assembly redcolor	1
10	8940163409	Air Inlet	1
11	8940163494	Spring Pin	1
12	8940163411	Lever 3/16" (5mm) orbital	1
31	8940166665	5"(125mm) Pad PSA w/o hole	1
	8940166666	5"(125mm) Pad Hook & Loop w/o hole	1
31B	8940166667	5"(125mm) Pad PSA w/ 5 holes (for **SV** & **CV**)	1
	8940166668	5"(125mm) Pad Hook & Loop w/ 5 holes (for **SV** & **CV**)	1
32	8940163434	Heat Isolation Washer	1
28	8940163430	Skirt	1
28A	8940163431	Skirt (for ***SV*** & **CV**)	1
36A	8940163439	Muffler Screw (for **SV**)	1
38	8940163441	Connector (for **SV**)	1
40	8940163438	Pin (for **SV**)	1
41	8940163440	Muffler	1
42	8940163445	Vacuum Adapter (for **SV**)	1
44	8940163447	Muffler (for **SV**)	1
45	8940163446	Vacuum Adapter (for **CV**)	1
46	8940163449	O-Ring (for **CV**)	1
47	8940163450	Revolving Connector (for **CV**)	1
48	8940163451	Screw (for **CV**)	1
49	8940163452	U nut (for **CV**)	1
	8940163525	Pad Wrench (not shown)	1
	8940163495	Dust Bag Unit (for **SV**) (not shown)	1
	8940163497	Dust Hose (for **SV**) (not shown)	1
	8940163459	**TUNE-UP KIT**	
		(incl. Index: 7, 17, 19, 20, 23, 26, 33, 50)	
	8940163460	**MAINTENANCE KIT**	
		Incl. Pad Wrench, Lock Ring Wrench, Motor Extractor	

	6159948770	Safety Instructions
	8940163220	Warning label (not shown)
	8940164564	Operator’s Manual

Recommended Accessories

Dust extraction kit
8940163461 (1 dust bag + dust hose)
Dust bag set
8940163496 (5 pcs dust bag)
SV

Vaccum hose adaptator ø25 (1”) / ø28 (1-1/8”)
6158044480
Vaccum hose adaptator ø25 (1”) / ø32 (1-1/4”)
6153501170
CV

Spare parts without part numbers are not sold separately - High wear part are underlined
www.cp.com